Overview of CAS HEP Activities at GRC

G. E. Welch
GRC Center Liaison
Convergent Aeronautics Solutions (CAS) Project

Mar 2016

Contents
CAS HEP activities

- High-Voltage HEP (HVHEP)
- Multifunctional Structures for High Energy Lightweight Load-bearing Storage (M-SHELLS)

High Voltage HEP activity

- PI: Ray Beach (GRC)
- Co-PI: Linda Taylor (GRC)

- Objectives
  - Demonstrate controllable, variable frequency AC system to reduce weight and enable distributed electric propulsion
  - Demonstrate materials to enable safe, high-voltage EP

- Idea/concepts
  - Variable frequency, AC power system
  - Doubly fed electric generators and propulsors (DFIM)
  - Settingless protection system
  - Zero energy fault isolation
  - Self-healing insulation

Hybrid Electric Propulsion Architecture Example

LibertyWorks®

45

Base Architecture

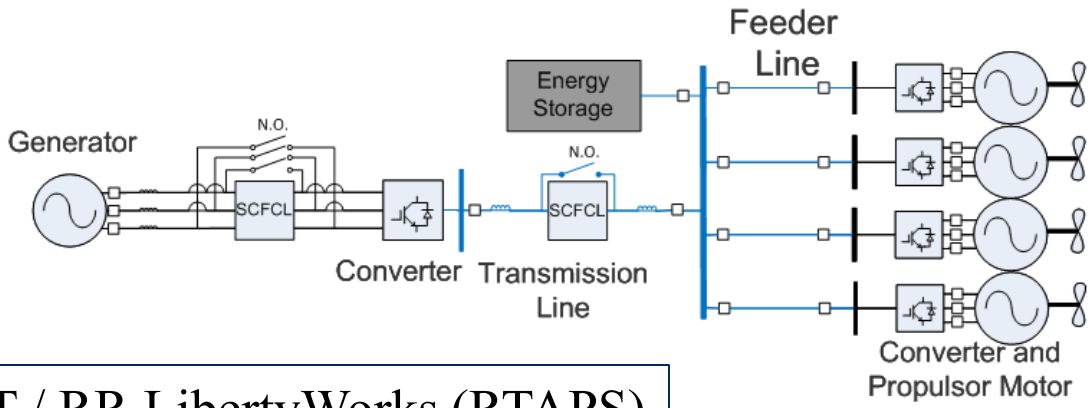

NASA AATT / RR LibertyWorks (RTAPS)

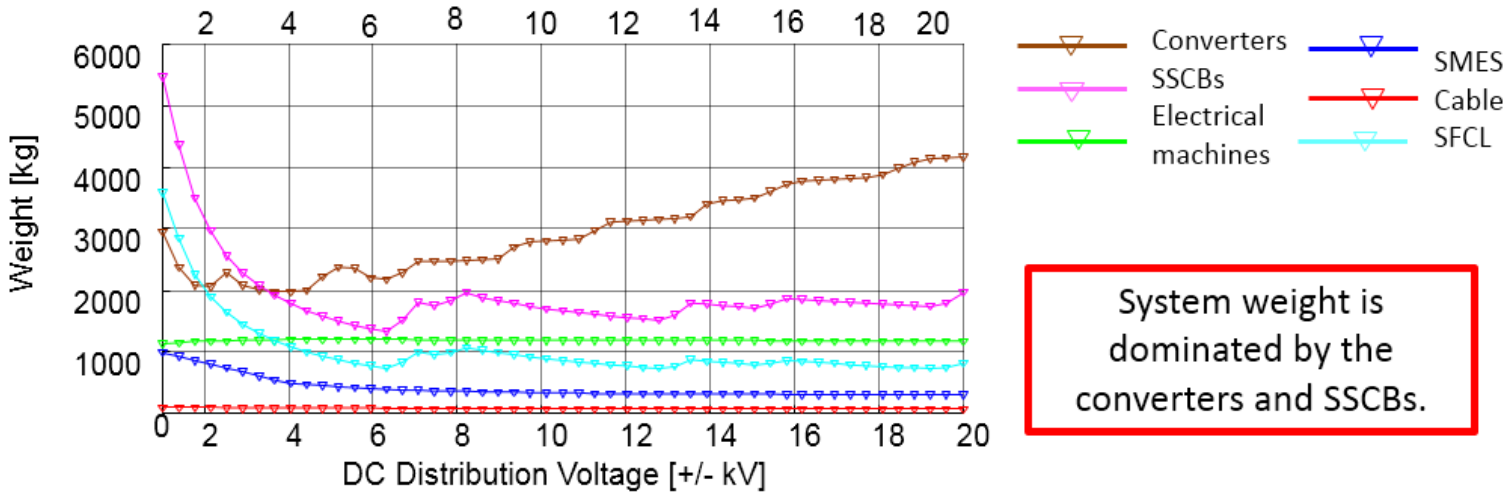

System weight is dominated by the converters and SSCBs.

Convergent Technologies

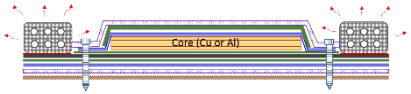

High voltage
Self healing insulation

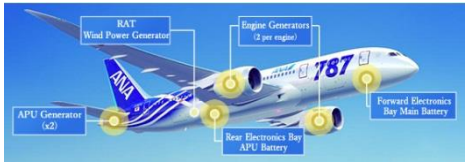

787
Variable frequency power system

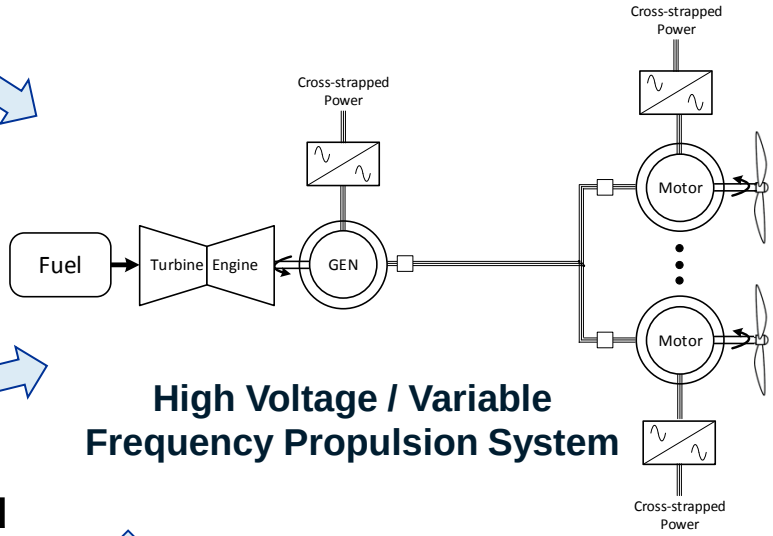

High Voltage / Variable Frequency Propulsion System

Gore flat cable

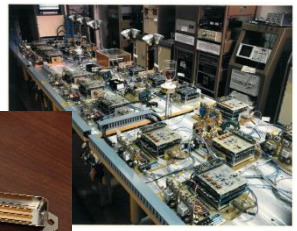

LeRC testbed

SSF 20kHz Power System

Wind turbine
Doubly fed machine

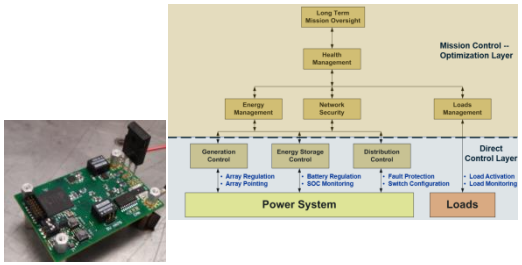

Advanced Exploration Systems (AES)
Digital control smart switchgear

Ion engine PPU
Zero energy fault clearance

High-Voltage AC Benefits

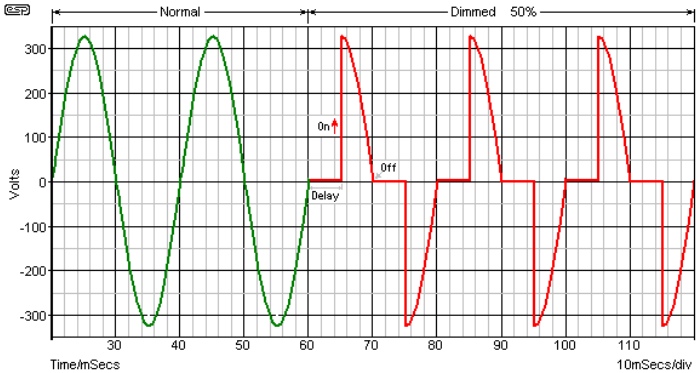

- **Adoption of AC leads to**
  - Utilization of zero voltage crossing
  - Energy delivery every half cycle
    - ✓ Minimal fault energy
  - Ease of voltage transformation
  - Electromagnetic torque coupling between generator & motors
    - ✓ Accommodate GR between turbine & propulsor
  - Doubly fed electric machine significantly reduces power electronic processing (& associated thermal management / weight)

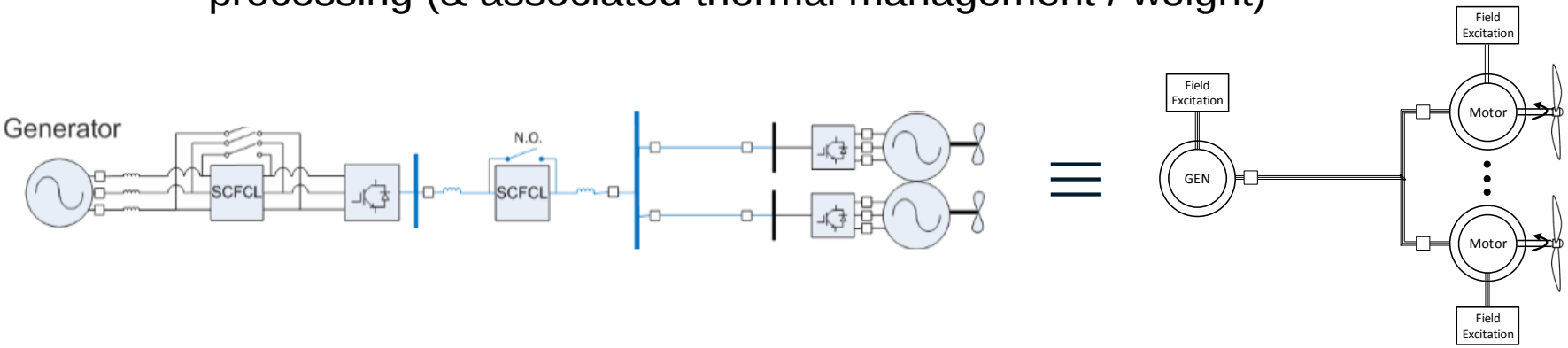

CAS HVHEP Work Breakdown

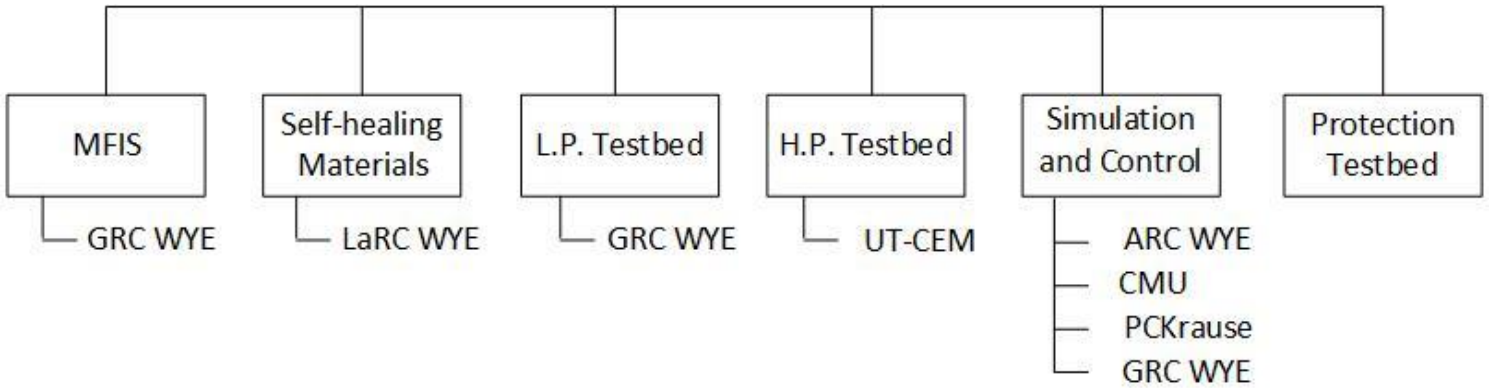

NASA Team Members

- ARC – Control development
- LaRC – Self healing insulation materials development
- GRC –
  - High voltage cable system development
  - Low power and high power testbed design/build, and test
  - Software in the loop simulation
  - Smart protection system development and test

Partners

PCKrause and Associates – Modeling and simulation of DFIM control

AFRL (WPAFB) – INVENT Program models

CMU – DFIM and power system control

UT-CEM – High speed brushless DFIM concept design

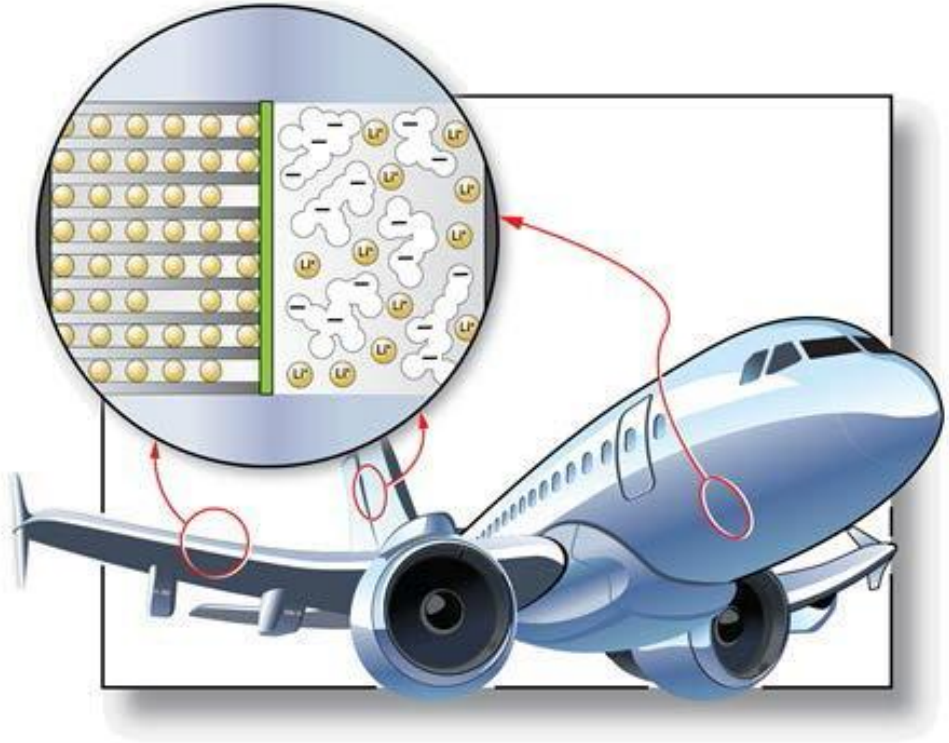

M-SHELLS

Multifunctional Structures for High Energy Lightweight Load-bearing Storage (M-SHELLS)

- PI: Pay Loyselle (GRC)
- Co-PIs: Eric Olson (LaRC), Diana Santiago (GRC)

- Objective – enable hybrid electric propulsion for commercial aircraft by melding load-carrying structure with energy storage to *save weight*

- Idea/concepts – multifunctional material
  - Hybridize (integrate) supercapacitor & battery chemistries to achieve optimal power and energy densities
  - Utilize strong carbon materials and nanotechnology enhancements to provide integral load-carrying capability.

Multifunctional Structures for High Energy Lightweight Load-bearing Storage (M-SHELLS)

Innovative Lightweight Structural Designs

Combining Advanced Hybrid Battery/Supercapacitors into Structural Elements

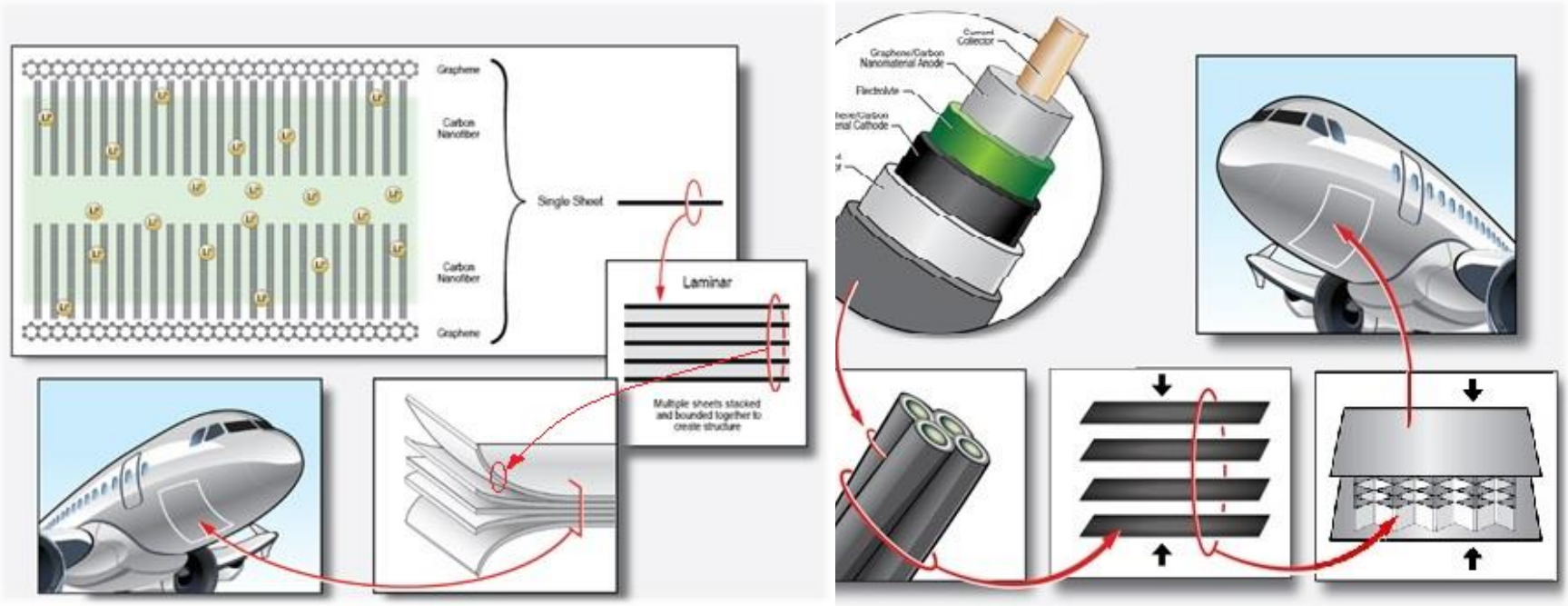

Multifunctional Structures for High Energy Lightweight Load-bearing Storage (M-SHELLS)

- Intent

Properties	Super-capacitor	Battery	Structural Hybrid Supercapacitor
High Power Density	✓		✓
Long Cyclic Life	✓		✓
Rapid Recharge	✓		✓
No Ionic Swelling	✓		✓
No Runaway Thermal	✓		✓
High Energy Density		✓	✓
Load Bearing			✓

- Approach – hybrid battery/supercaps & lightweight structural integration
  - Advanced nanostructures & materials
    - ✓ High surface area & electrochemical reactivity
    - ✓ High strength components & integration of constituents
  - High-performance polymer & ceramic electrolytes & separators
    - ✓ High ionic conductivity and structural strength
    - ✓ Enables strength & stiffness / transfers stress to electrodes

Multifunctional Structures for High Energy Lightweight Load-bearing Storage (M-SHELLS)